Diritti riservati All rights reserved

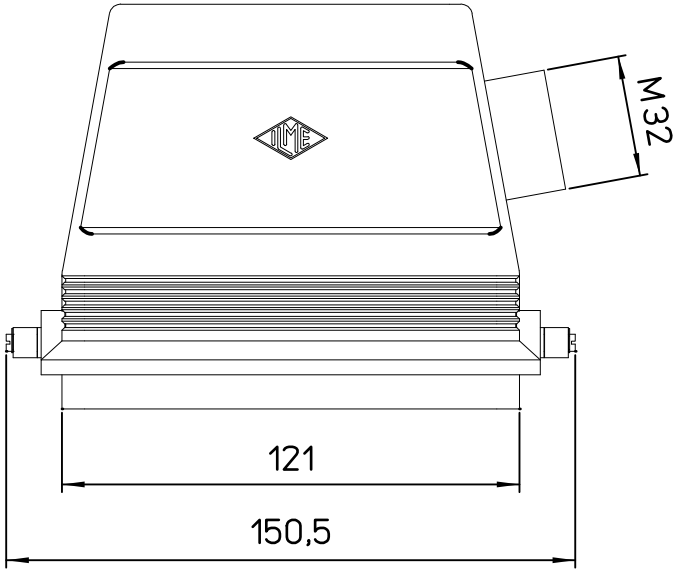

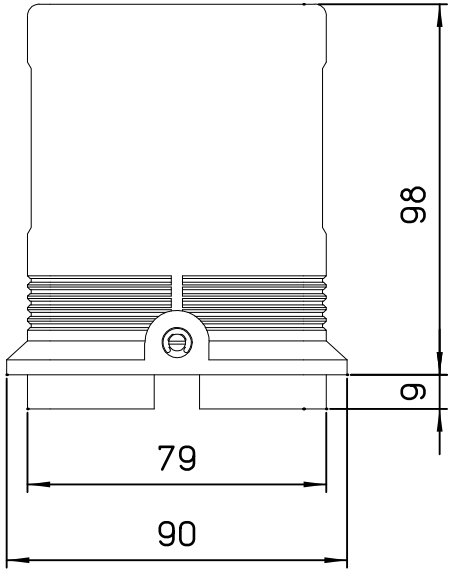

dimensions in mm	MHO 48 L32	Scale
Date 14/12/06	hood side entry M32	1:2
Sign.		